CTCDC5D23F Series

From 2.7µH to 470µH

SPECIFICATIONS

Part numbers indicate inductance tolerance available.
K = ±10%, L = ±15%, M = ±20%

Part Number	Inductance (µH)	L Test Freq. (KHz)	DCR Max. (mΩ)	Rated DC Current (A)
CTCDC5D23F-2R7M	2.7	100	44	2.080
CTCDC5D23F-3R3M	3.3	100	49	1.900
CTCDC5D23F-3R9M	3.9	100	56	1.840
CTCDC5D23F-4R7M	4.7	100	68	1.600
CTCDC5D23F-5R6M	5.6	100	78	1.440
CTCDC5D23F-6R8M	6.8	100	91	1.300
CTCDC5D23F-8R2M	8.2	100	103	1.120
CTCDC5D23F-100L	10	100	133	1.040
CTCDC5D23F-120L	12	100	148	0.900
CTCDC5D23F-150K	15	100	166	0.820
CTCDC5D23F-180K	18	100	213	0.770
CTCDC5D23F-220K	22	100	248	0.730
CTCDC5D23F-270K	27	100	328	0.640
CTCDC5D23F-330K	33	100	378	0.580
CTCDC5D23F-390K	39	100	438	0.540
CTCDC5D23F-470K	47	100	546	0.440
CTCDC5D23F-560K	56	100	621	0.430
CTCDC5D23F-680K	68	100	715	0.410
CTCDC5D23F-820K	82	100	1000	0.350
CTCDC5D23F-101K	100	100	1070	0.330
CTCDC5D23F-121K	120	100	1250	0.320
CTCDC5D23F-151K	150	100	1660	0.260
CTCDC5D23F-181K	180	100	1900	0.230
CTCDC5D23F-221K	220	100	2440	0.210
CTCDC5D23F-271K	270	100	2730	0.190
CTCDC5D23F-331K	330	100	3160	0.180
CTCDC5D23F-391K	390	100	4060	0.170
CTCDC5D23F-471K	470	100	4780	0.165

CHARACTERISTICS

Description: SMD (shielded) power inductor
Applications: Power supplies for VTR, OA equipment, LCD televisions, PC notebooks, portable communication equipment, DC/DC converters, etc.
Operating Temperature: -30°C to +100°C
Rated DC Current: Indicates the current when the inductance is 10% lower than its initial value at D.C. superimposition or D.C current when at ΔT=40°C lower, whichever is lower
Inductance Tolerance: ±10%, ±15%, ±20%
Testing: Tested on an HP4285A at 100KHz, 0.25Vrms, 0Adc
Packaging: Tape & Reel.
Marking: Parts are marked with inductance code.
Miscellaneous: **RoHS Compliant.**
Additional Information: Additional electrical & physical information available upon request.
Samples available. See website for ordering information.

PHYSICAL DIMENSIONS

Size	A	B	C	D	E
	Max.	Max.			
mm	6.0	2.5	1.2	0.8	2.2
inches	0.236	0.098	0.047	0.031	0.087

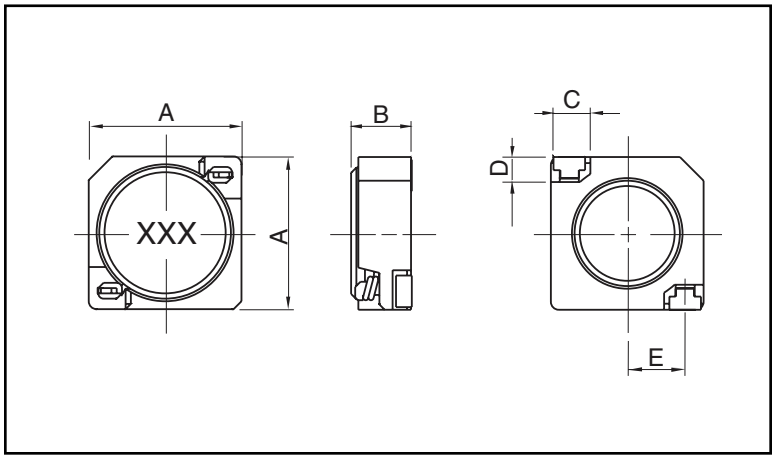

PAD LAYOUT

Unit: mm

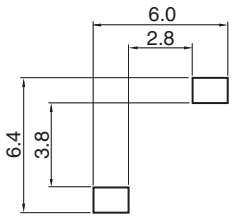

Copyright © 2017 by CT Magnetics, DBA Central Technologies. All rights reserved.
CT Magnetics reserves the right to make improvements or change specifications without notice